One-Stop solution for Metal Raw Material

Making Purchase Easy

WUXI JIN MING JIAN DE INDUSTRY&TRADE CO., LTD

ALUMINUM

Aluminium Coil

Grade:1050,1060,1100,3003,3004,3105,5052,
5005,5083,6061,6063,7075,etc
Standard: ASTM SAE EN JIS ISO GB
Size: According to the customer's requests
Thickness: 0.1mm-10.0mm
Width: 100mm-2500mm
Certifications: ISO 9001,SGS,BV

Aluminium Sheet

Grade: 1050,1060,1100,3003,3004,3105,5052,
5005,5083,6061,6063,7075,etc
Standard: ASTM SAE EN JIS ISO GB
Thickness: 0.1mm-10.0mm
Width: 900mm-2000mm
Certifications: ISO 9001,SGS,BV

Aluminium Tube

Material: 5052,5652, 5154, 5254, 5454, 5083, 2014,2014A,2214,2017,2017A,2117,5086, 5056,5456, 2024, 2014, 6061, 6063,6082, etc.
Specification for round pipe:
OD(15mm-160mm) / WT(1-40mm) / Length (1-12m) Specification for square pipe:
SIZE(7X7mm- 150X150mm) / WT(1-40mm) / Length(1-12m)

Aluminium Embossed Plate

ALLOY:
1050/1060/1100/1200/3003/3005/3105/5005/5052/5754/8011
THICKNESS: 0.3-4.0mm 4.0-10.0mm
WIDTH: 500-1550mm
LENGTH: 500-9000mm
Pattern type: big five bars, small five bars, three bars, pointer type, diamond shape, orange peel pattern
SURFACE QUALITY: be free from Oil Stain, Dent, Inclusion, Scratches, Stain, Oxide Discoloration, Breaks,
Corrosion, Roll Marks, Dirt Streaks and other defect which will interfere with use

Aluminium Billets

Standard: ASTM B221M, GB/T 3191, JIS H4040,etc.
Material052、5652、5154、5254、5454、5083、6063、2014、 2014A、2214、2017、2017A、2117、5086 etc.
Diameter: 6-800mm
Length: 2m,3m,5.8m,6m,or as required

Aluminium Ingot

ModelNumber:A7,A00,A1,AIB8,ADC12
Application: Manufacture cars,trains,sub-ways,ships,planes

ALUMINUM

MODEL AND COMPOSITION TABLE

Grade	Si	fe	Cu	Mu	Zn	T	Single	Total	Al
1050	0.25	0.4	0.05	0.05	0.07	0.05	0.03		99.5min
1060	0.25	0.35	0.05	0.03	0.05	0.03	0.03		99.6min
1100	Si+Fe 0.95		0.05	0.05	0.1	/	0.05	0.15	99.00min
3003	0.6	0.7	0.10	1.0-1.5	0.10	/	0.05	0.15	the rest
3004	0.30	0.7	0.25	1.0-1.5	0.25	/	0.05	0.15	the rest
3105	0.6	0.7	0.30	0.3-0.8	0.40	0.10	0.05	0.15	the rest
5005	0.30	0.7	0.20	0.20	0.25	/	0.05	0.15	the rest
5050	0.40	0.7	0.20	0.10	0.25	/	0.05	0.15	the rest
5052	0.25	0.40	0.10	0.10	0.10	/	0.05	0.15	the rest
5754	0.40	0.40	0.10	0.50	0.20	0.15	0.05	0.15	the rest
5083	0.40	0.40	0.10	0.4-1.0	0.25	0.15	0.05	0.15	the rest
6061	0.4-0.8	0.7	0.15-0.4	0.15	0.25	0.15	0.05	0.15	the rest
6063	0.2-0.6	0.35	0.10	0.10	0.10	0.10	0.05	0.15	the rest
8011	0.5-0.9	0.6-1.0	0.10	0.20	0.10	0.08	0.05	0.15	the rest

The regular sizes are in stock. If you need custom size, the delivery time will be determined based on the specific quantity.

ALUMINUM STORAGE CENTER

PROCESS CENTER

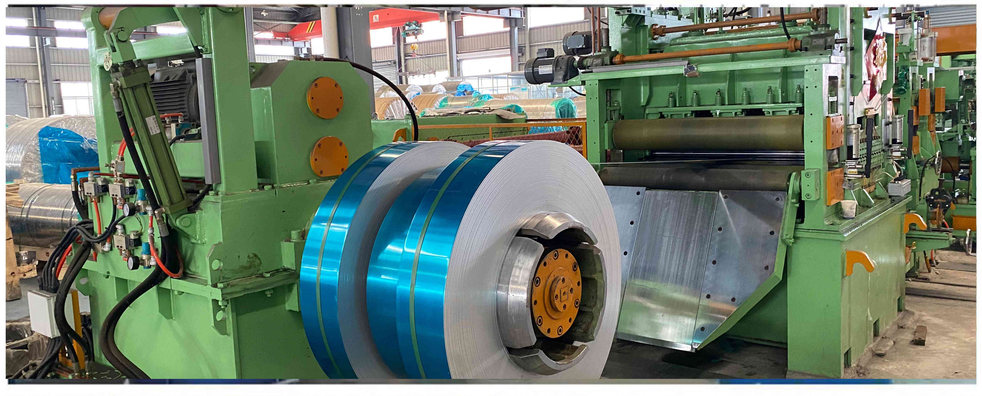

PACKING / LOADING

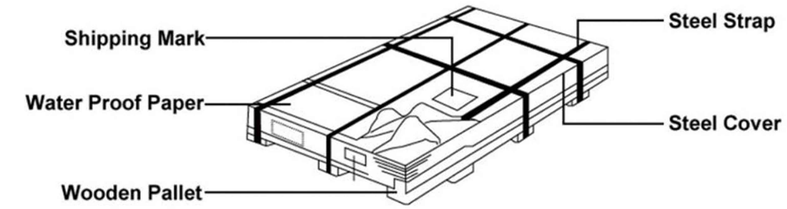

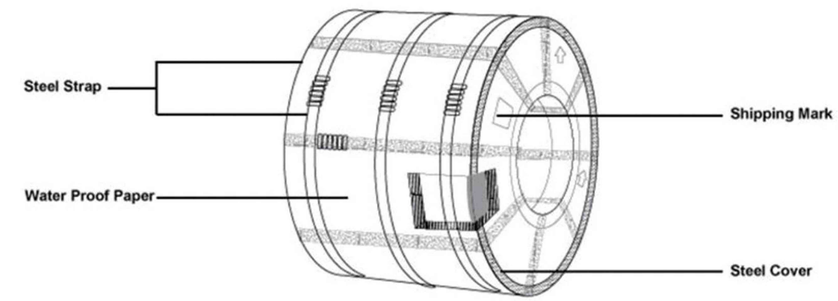

QUALITY CERTI-FICATION

Raw Material Inspection: Inspect the incoming raw steel material before production to ensure it meets the required standards. Check the dimensions, composition, and surface quality of the steel.

In-Process Inspection: Inspect the steel during the manufacturing process to identify defects, such as cracks, irregularities, or warping. Perform dimensional checks at each stage of production to ensure that the steel is being manufactured to the required specifications.

Final Inspection: Conduct a final inspection of the finished steel products to ensure that they meet the required quality standards. Check the surface finish, dimensions, and overall appearance of the steel.

Testing: Perform a variety of tests on the steel products to verify their quality, such as tensile strength, hardness, impact resistance, and corrosion resistance tests.

Documentation: Record all inspection and test results in a detailed report, including any defects or deviations from the required standards. Use this documentation to identify areas for improvement and to maintain consistency in the quality of your steel products.

Continuous Improvement: Continuously monitor the quality of your steel products and review the inspection and testing process to identify opportunities for improvement. Implement corrective actions as necessary to improve the quality of your steel products and maintain customer satisfaction.

TEL：(+86) 0510 88992105 PHONE: (+86) 180 6153 5028

EMAIL: info@wxjmjdss.com

WEB: https://www.steeltd.com

OFFICE ADDRESS: 2102-2105,Yuexing Building,Guangyi Road,Liangxi District,WuxiJiangsu,CN

FACTORY ADDRESS: Nongshi Road,#07,Dongbei Tang District,Xi Shan,WuxiJiangsu,CN,Zip:214000